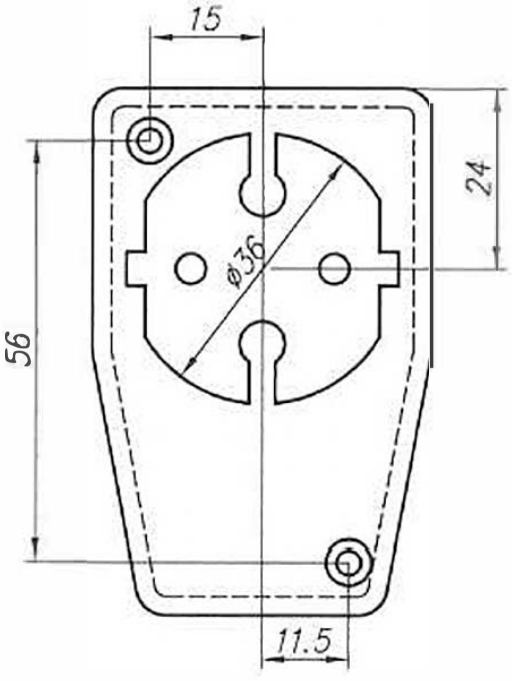
15
24
56
ø36
11.5

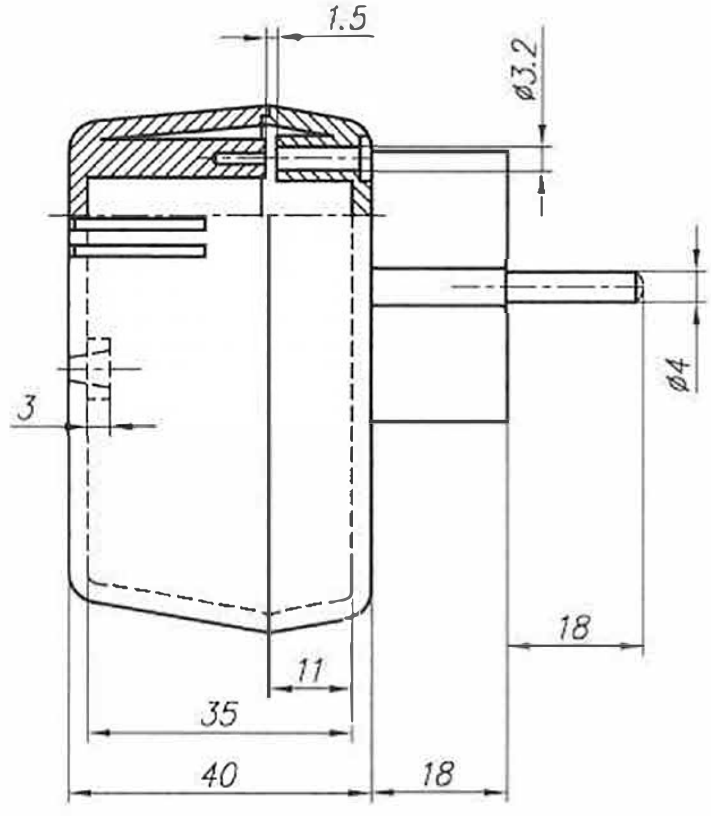
1.5
ø3.2
ø4
3
18
11
35
40
18

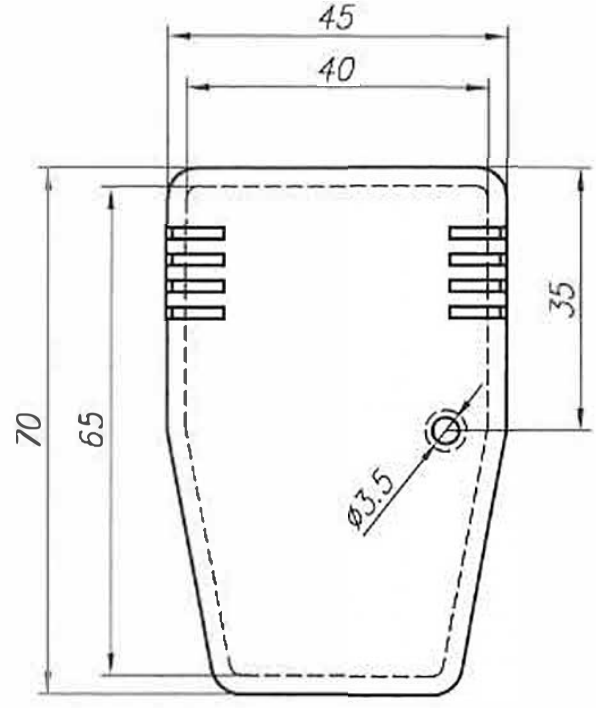
45
40
35
70
65
ø3.5